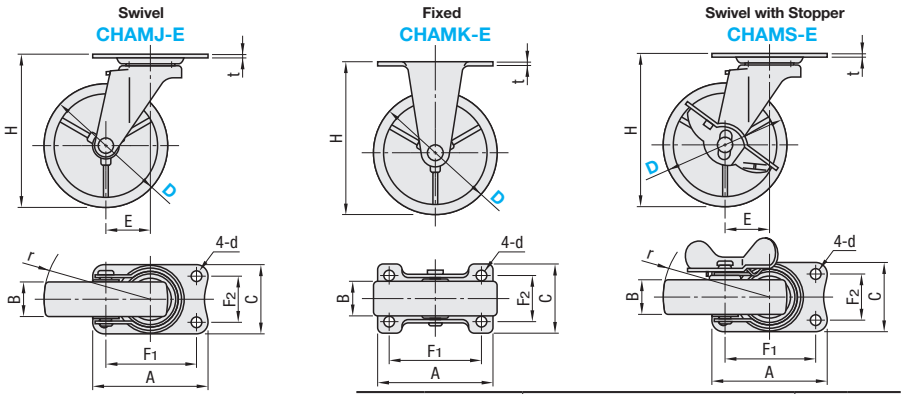

Main Body		Wheel		Bearing	
M Material	S Surface Treatment	M Material (Color)		Swiveling Part	Wheel
SPHC	Trivalent Chromate	Synthetic Rubber (Black), Urethane (Brown), Nylon (White)		Incorporated	None

Main Body	Part Number Type	D	Wheel Material	H	A	C	F1	F2	d	E	r	B R	B U	B N	t	Allowable Load (N) R	Allowable Load (N) U	Allowable Load (N) N	Mass (g) R	Mass (g) U	Mass (g) N	Unit Price R	Unit Price U	Unit Price N
Swivel	CHAMJ-E	50	R (Rubber)	65	70	42	56	28	6.5	22	47	20	21	21	2	300	380	400	180	165	150			
		65		82						23	56						400		250	200	190			
		75		92						27	65	21				400	450	500	285	215	200			
		100		122	100	58	82	40	8.8	31	82	25	28	25	2.3	500	600	600	600	465	420			
Fixed	CHAMK-E	50	U (Urethane)	65	70	42	56	28	6.5	-	-	20	21	21	2	300	380	400	140	120	110			
		65		82													400		195	145	135			
		75		92								21				400	450	500	230	160	145			
		100		122	100	58	82	40	8.8			25	28	25	2.3	500	600	600	505	345	325			
Swivel with Stopper	CHAMS-E	50	N (Nylon)	65	70	42	56	28	6.5	22	47	20	21	21	2	300	380	400	205	185	170			
		65		82						23	56						400		285	215	215			
		75		92						27	65	21				400	450	500	320	250	230			
		100		122	100	58	82	40	8.8	31	82	25	28	25	2.3	500	600	600	670	525	475			

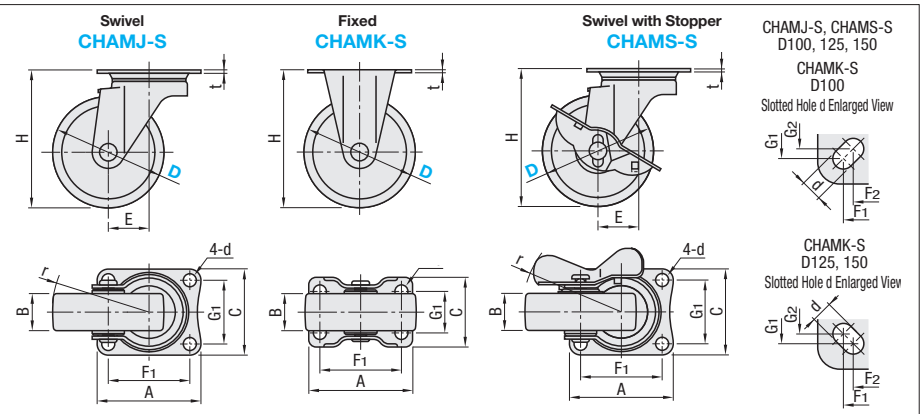

Main Body		Wheel		Bearing	
M Material	S Surface Treatment	M Material (Color)		Swiveling Part	Wheel
SPHC	Trivalent Chromate	Synthetic Rubber (Black), Urethane (D50, 65, 75: Brown, D100, 125, 150: Gray), Nylon (White)		Incorporated	None

Main Body	Part Number Type	D	Wheel Material	H	A	C	F1	F2	G1	G2	d	E	r	B R	B U	B N	t	Allowable Load (N) R	Allowable Load (N) U	Allowable Load (N) N	Mass (g) R	Mass (g) U	Mass (g) N	Unit Price R	Unit Price U	Unit Price N
Swivel	CHAMJ-S	50	R (Rubber) U (Urethane) N (Nylon)	70	70	58	55	-	42	-	8.8	27	53	28	25	28	2.3	500	600	600	325	305	290			
		65		85									61	25		25				700	375	325	310			
		75		93								28	66		26			600	700	800	420	345	325			
		100		132	90	90	71	68	71	68	11	32	83	32	32	32	3.2	1200	1000	1200	920	790	770			
		125		168	102	102	80	75	80	75		40	105	38	40	40		1500	1300	1500	1505	1465	1315			
		150		190									115	40				1600	1400	1600	1710	1585	1490			
Fixed	CHAMK-S	50		70	70	47	55	-	28	-	8.8	-	-	28	25	28	2.3	500	600	600	195	175	160			
		65		85										25		25				700	250	200	185			
		75		93											26			600	700	800	295	220	200			
		100		132	110	75	90	80	50	45	11			32	32	32	2.6	1200	1000	1200	740	610	585			
		125		168	136	100	112	100	56	53				38	40	40	3.0	1500	1300	1500	1135	1090	945			
		150		190	137	93								40			2.6	1600	1400	1600	1290	1160	1100			
Swivel with Stopper	CHAMS-S	50		70	70	58	55	-	42	-	8.8	27	67	28	25	28	2.3	500	600	600	345	335	310			
		65		85									68	25		25				700	430	375	350			
		75		93								28			26			600	700	800	470	380	360			
		100		132	90	90	71	68	71	68	11	32	86	32	32	32	3.2	1200	1000	1200	1005	875	850			
		125		168	102	102	80	75	80	75		40	108	38	40	40		1500	1300	1500	1690	1650	1505			
		150		190									115	40				1600	1400	1600	1875	1750	1700			

Ordering Example

Part Number	-	Wheel Material
CHAMS-E75	-	U
CHAMJ-S65	-	R