Plastic Rails / Transfer Rollers

Features: Rails to be used under plastic chains. Has slotted holes, and owns the mechanism where plastic elongation is considered.

Plastic Rails

RoHS10

EPFCH (Rail)

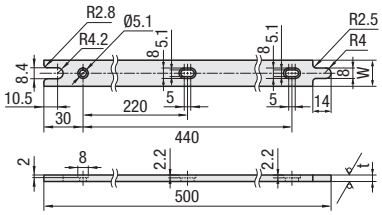

EPFCE (E Plate)

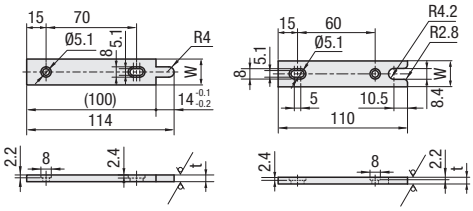

Spacer / Screw for Slotted Holes

Product Name	Spacer	Screw
Part Number	TASC4-0.5-3	CBSTS4-8
Catalog Page	P.2-154	P.2-221

Part Number	Material
EPFCH EPFCE	Ultra High-Molecular-Weight Polyethylene

Part Number	W	t	Unit Price	
			EPFCH	EPFCE
Rail: EPFCH EPlate: EPFCE	20	5		

Ordering Example

Part Number	-	W	-	t
EPFCH	-	20	-	5

Alterations

Part Number	-	T	-	(PC)
EPFCH20	-	5	-	PC

Alterations	Overall Length
Spec.	Changes the overall length as specified. Ordering Code: PC235 1mm Increment Applicable Conditions: 100≤PC≤499 100≤PC≤249 2 Holes 250≤PC≤499 3 Holes 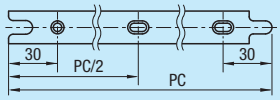
Code	PC

Features: Transfer Rollers between conveyors. Connecting distance is adjustable by combination.

Transfer Rollers

RoHS10

CCRL

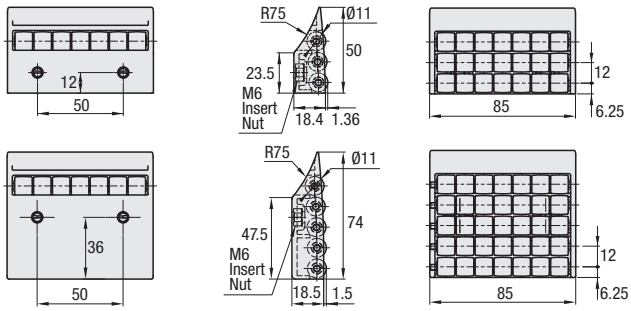

Type	Material		
	Main Body	Roller	Screw
CCRL	Polyacetal	Polyacetal	SUS304

Part Number	Number of Trains	Unit Price
CCRL	3	
	5	

Ordering Example

Part Number	-	Number of Trains
CCRL	-	3
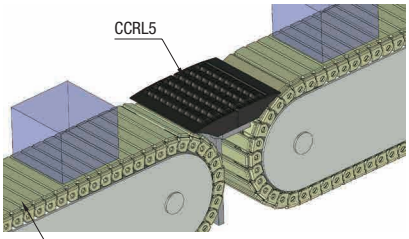
Example