※Thermal resistance test condition
· Ambient air cooling · Heat-sink fins are vertically set to the ground at 60 degrees C
· Anodized aluminium extrusion · Put a heat source on all the inner side surface of heat-sink fins

Part no. / Dimensions

Part no.	W	H	D	※ Thermal resistance rate (˚C/W)
NEW AWA 5-3- 5SS	52	32	53.2	11.2
NEW AWA 5-3- 7SS	52	32	73.2	9.18
NEW AWA 5-3-10SS	52	32	98.2	7.64
NEW AWA 5-3-12SS	52	32	123.2	6.63
AWA 6-6- 7SS	61	61	68	4.41
AWA 6-6-10SS	61	61	98	3.5
AWA 6-6-14SS	61	61	138	2.83
AWA 6-6-19SS	61	61	188	2.33
AWA 6-6-24SS	61	61	238	2.02
AWA 8-4- 8SS	76	41	78	5.97
AWA 8-4-10SS	76	41	103	5.01
AWA 8-4-13SS	76	41	128	4.37
AWA 8-4-16SS	76	41	163	3.76
AWA 8-8- 9SS	82	82	86	3.1
AWA 8-8-11SS	82	82	111	2.63
AWA 8-8-16SS	82	82	156	2.12
AWA 8-8-21SS	82	82	206	1.79
AWA 8-8-26SS	82	82	261	1.54
AWA10-5-10SS	102	52	95.6	4.52
AWA10-5-14SS	102	52	135.6	3.62
AWA10-5-18SS	102	52	175.6	3.08
AWA10-5-23SS	102	52	225.6	2.64
NEW AWA12-7- 9SS	115.7	67	90.6	3.6
NEW AWA12-7-12SS	115.7	67	125.6	2.93
NEW AWA12-7-17SS	115.7	67	165.1	2.47
NEW AWA12-7-20SS	115.7	67	200.6	2.18
AWA15-8-12SS	152	77	120.6	2.64
AWA15-8-16SS	152	77	160.6	2.2
AWA15-8-21SS	152	77	210.6	1.86
AWA15-8-26SS	152	77	260.6	1.63
NEW AWA20-8-15SS	202.4	77.4	153.8	2.3
NEW AWA20-8-19SS	202.4	77.4	193.8	1.99
NEW AWA20-8-24SS	202.4	77.4	243.8	1.72
NEW AWA20-8-29SS	202.4	77.4	293.8	1.54

AWA dimensions

• CAD data is downloadable from our website. Please use the data for your designing.

AWA5-3-□
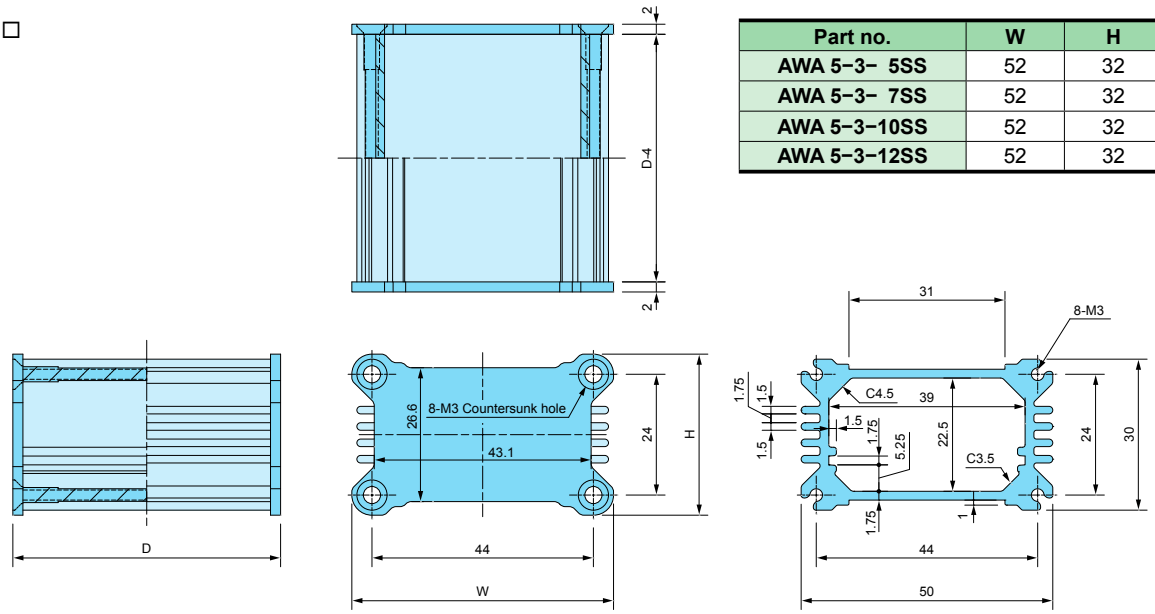
Part no.	W	H	D
AWA 5-3- 5SS	52	32	53.2
AWA 5-3- 7SS	52	32	73.2
AWA 5-3-10SS	52	32	98.2
AWA 5-3-12SS	52	32	123.2