Inside Micrometers

SERIES 141 — Interchangeable-Rod Type

Technical Data

Metric Model
Accuracy: ±(6+L/50)µm
L=Maximum measuring length (mm)
Fraction rounded up

Inch Model
Accuracy: ±{.00024+ (.00004xR/2)}"
R=Maximum measuring length (inch)
Fraction rounded up

Graduation: 0.01mm or .001"

Optional Accessories

----: Setting ring (See page C-29.)

141-233

FEATURES

- Wide range of ID measurements with interchangeable rods.
- Each interchangeable rod is marked with its measuring range.
- The sizes of interchangeable rods can be adjusted with spacing collars.
- Both micrometer head and furnished rods are satin-chrome finished throughout.
- Supplied in fitted plastic case. Over 1000mm / 40" supplied in wooden case.

141-101

When using the extension rod

DIMENSIONS

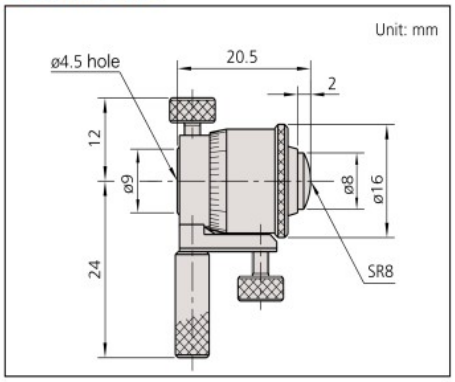

SPECIFICATIONS

Metric

Range	Order No.	Travel of micrometer head	Remarks
25 - 32mm	**141-001 / 141-003***	7mm	Micrometer Head only
25 - 50mm	**141-101 / 141-103***	7mm	with 2 rods
50 - 63mm	**141-025 / 141-027***	13mm	Micrometer Head only
50 - 200mm	**141-205 / 141-211***	13mm	with 3 rods
50 - 300mm	**141-206 / 141-212***	13mm	with 5 rods
200 - 225mm	**141-009 / 141-011***	25mm	Micrometer Head only
200 - 500mm	**141-117**	25mm	with 3 rods
200 - 1000mm	**141-118**	25mm	with 8 rods

*with carbide-tipped face

Inch

Range	Order No.	Travel of micrometer head	Remarks
1" - 1.25"	**141-002 / 141-004***	.25"	Micrometer Head only
1" - 2"	**141-102 / 141-104***	.25"	with 2 rods
2" - 2.5"	**141-026 / 141-028***	.5"	Micrometer Head only
2" - 8"	**141-208 / 141-214***	.5"	with 3 rods
2" - 12"	**141-233 / 141-215***	.5"	with 5 rods
8" - 9"	**141-010 / 141-012***	1"	Micrometer Head only
8" - 20"	**141-121**	1"	with 3 rods
8" - 40"	**141-122**	1"	with 8 rods

*with carbide-tipped face

Mitutoyo