EFH PLASTIC HINGES

RoHS

Original ELESA Model CFV elesa

EFH5065SHP
(Countersunk)

EFH5065EHP
(Counterbored)

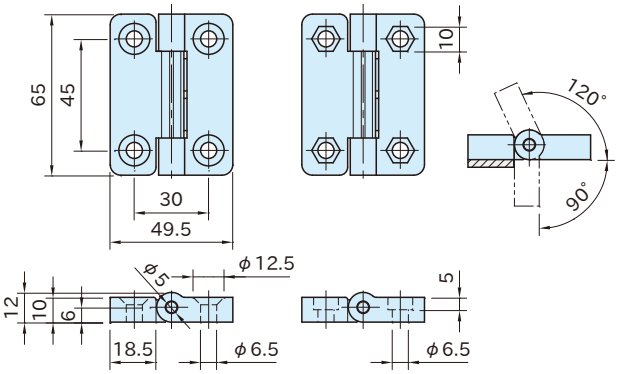

EFH5065SHP (Countersunk)

EFH5065EHP (Counterbored)

Body	Pivot Pin
Polyamide(glass-fiber reinforced) Black matte	Stainless steel (SUS303)

Part Number	Weight (g)
EFH5065SHP	38
EFH5065EHP	38

Features:

- Four choices of opening position : −90˚、0˚、70˚and 115˚
- Holding torque at the above positions : 3N·m

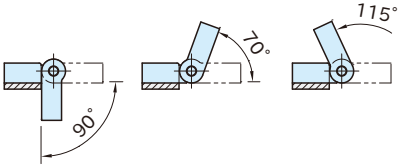

Technical Information

- Pivot angle : Up to 210˚
- Working temperature : 0 to 80℃

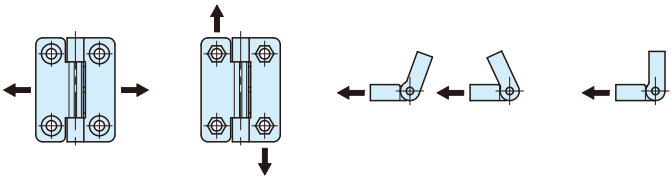

Radial Load　Axial Load　70˚-/115˚-angle Load　90˚-angle Load

Part Number	Radial Load		Axial Load		70˚-/115˚-angle Load		90˚-angle Load		Max. Screw Torque (N·m)
	Allowable Load Er (N)	Breaking Load Rr (N)	Allowable Load Ea (N)	Breaking Load Ra (N)	Allowable Load E_{70}、E_{115} (N)	Breaking Load R_{70}、R_{115} (N)	Allowable Load E_{90} (N)	Breaking Load R_{90} (N)	
EFH5065SHP	2070	5060	1320	4480	2150	3170	1630	3380	4
EFH5065EHP	1940	4900	1520	3840	1430	3660	970	3140	